ACCURATE

LOCK & HARDWARE

AMERICAN CRAFTED SINCE 1972

# LR-SW LIGATURE RESISTANT SWINGING DOOR SYSTEM

TO PROVIDE SAFETY + PRIVACY FOR PATIENT BATHROOMS

# LR-SW SWINGING DOOR SYSTEM

Designed to be a heavy-duty, cost-effective solution that provides increased safety and privacy in the bathroom.

This swinging door solution can hold over 300lbs of weight and operates without springs, which removes possible ligature points and allows the door to swing in both directions. It can open to 90° in either direction, stay open by design, and when moved to approximately 60° will self-close centered to the opening.

# LR SWINGING DOOR

## TOP VIEW

## BOTTOM VIEW

# LR SWINGING DOOR

## DOOR CAN STAY IN OPEN POSITION

# LR-SW DOOR MATERIAL OPTIONS

## BLACK PLASTIC
(Standard)

## FROSTED POLYCARBONATE

## ALUMINUM
(Simulated Wood Finish Option Shown, Crescent Handle Optional)

**The top of the door can be crowned, square or customized to meet specifications.**

# LR-SW EXAMPLE DIMENSIONS

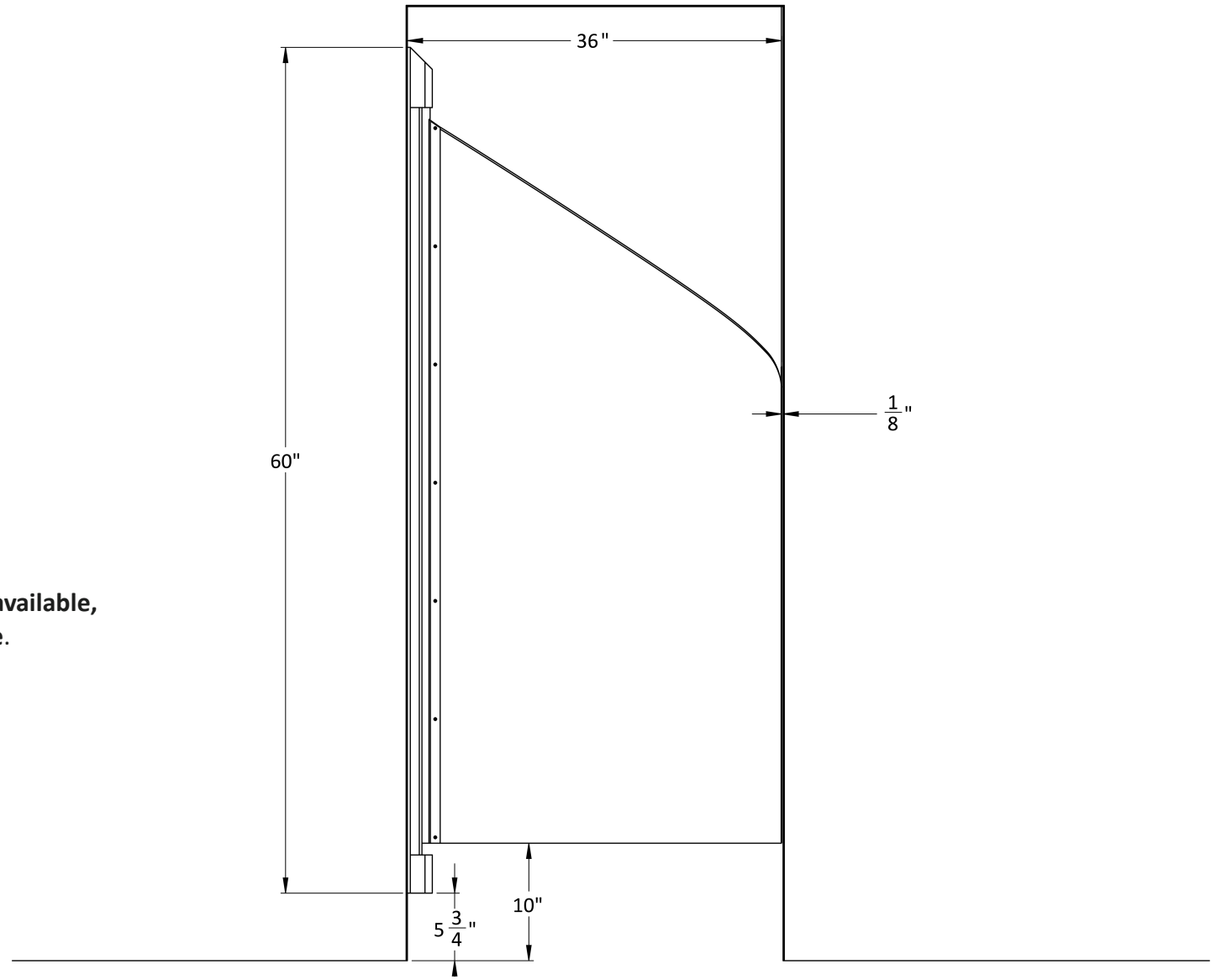


**Other door heights are available, please call for assistance**.

# HOW TO SPECIFY

**LR-SW.FRAMEWIDTH.DOORMATERIAL**

**FRAME WIDTH**
Cased opening frame dimension (inches)

**DOOR MATERIAL**
- Black Plastic (BP)
- Frosted Polycarbonate (FP)
- Aluminum Door – (AL)
- Optional Wood Stain (ALW) – Call for assistance with pricing

## EXAMPLES

**LR-SW | Plastic Door**
**E.g. LR-SW.36.BP**

**LR-SW | Polycarbonate Door**
**E.g. LR-SW.40.FP**

**LR-SW | Aluminum Door**
**E.g. LR-SW.48.AL**

## NOTES

- **When using other manufacturers' doors, please specify Door Thickness (3/4" maximum)**
- **Custom system heights available, please call for assistance**
- **The top of the door can be crowned, square or customized to meet specifications**
- **Optional Crescent Pull, please call for assistance**

# ACCURATE LOCK & HARDWARE
# MANUFACTURERS OF LOCKS AND CUSTOM ARCHITECTURAL HARDWARE

1 Annie Place | Stamford, CT 06902

**P:** 203.348.8865
**F:** 203.348.5234
**E:** sales@accuratelockandhardware.com

**www.accuratelockandhardware.com**